RIGA

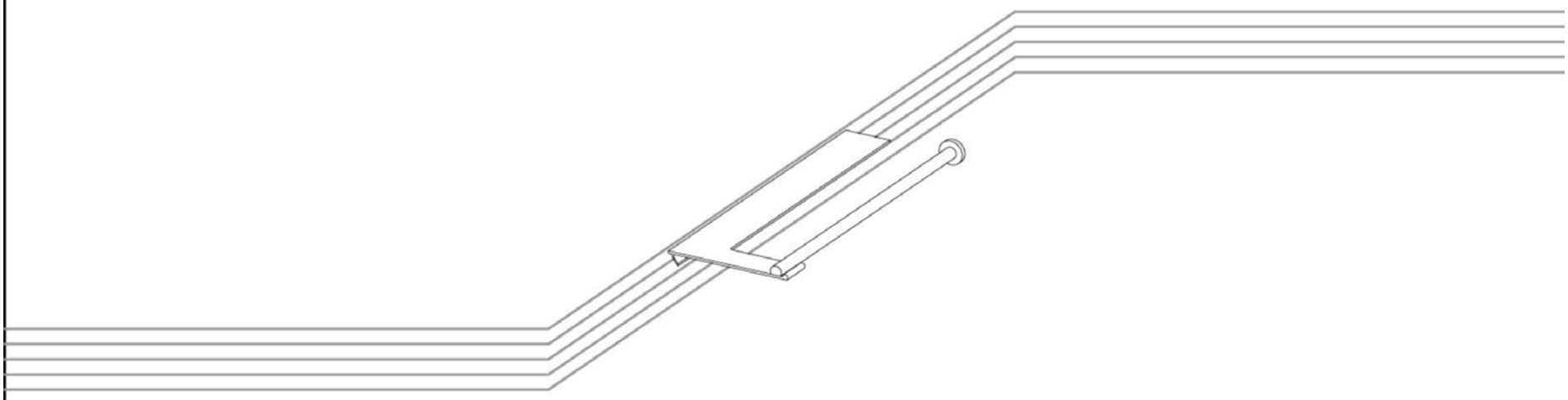

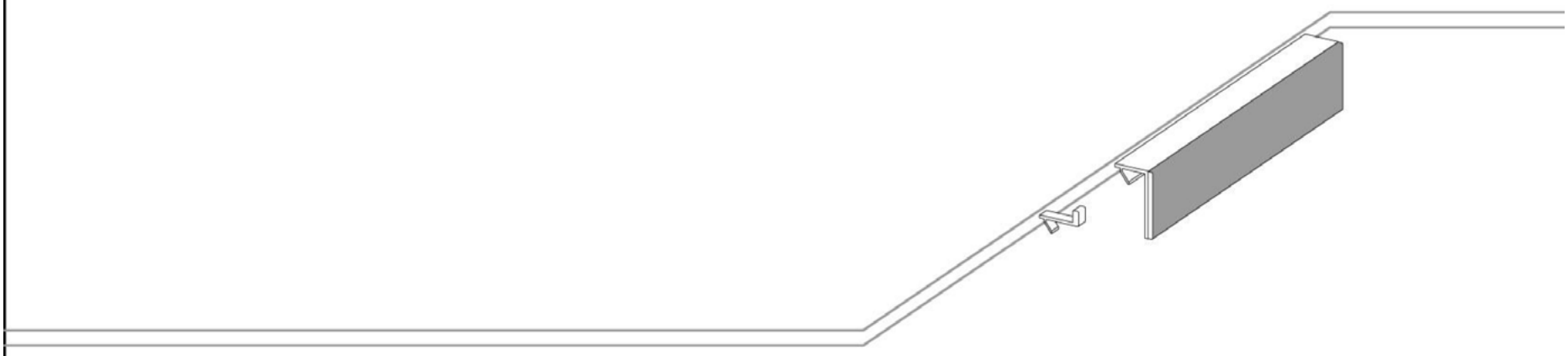

AFF FURNITURE

- MODERN SOLUTIONS FOR YOUR HOME -

RIGA

RIGA

02 RIGA KITCHEN

04 RIGA BATHROOM

06 RIGA LIVING

07 RIGA CHILDREN BEDROOM

08 RIGA COMPONENTS

13 RIGA KIT

16 RIGA INFO

RIGA kitchen

RIGA equips the kitchen with a stylish profile system.
A set of removable aluminum accessories design the upper
part of the profile with shelves, hooks, holders, transparent containers.

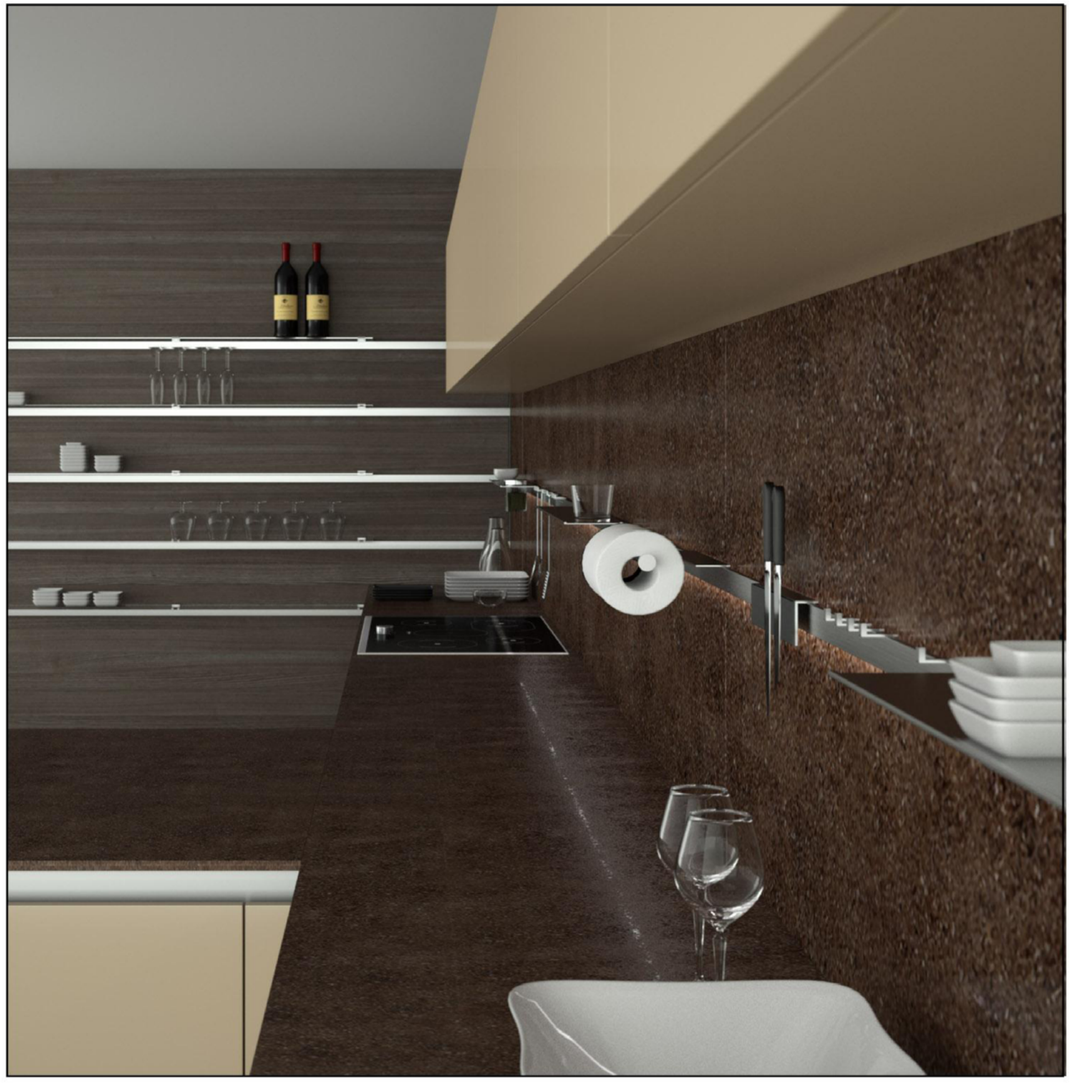

The system is available with or without LED lighting, which are activated by touch swith.
RIGA horizontal lines can also easily welcome back panels of different materials,
like wood, glass and methacrylate, to create equipped boiserie.

RIGA bathroom

RIGA made of hygienic aluminum is ideal for bathrooms, appied to wals, can hold mirrors, napkins and a range of functional accessories with a minimal design.

The LED light version can be particularly useful as mirror

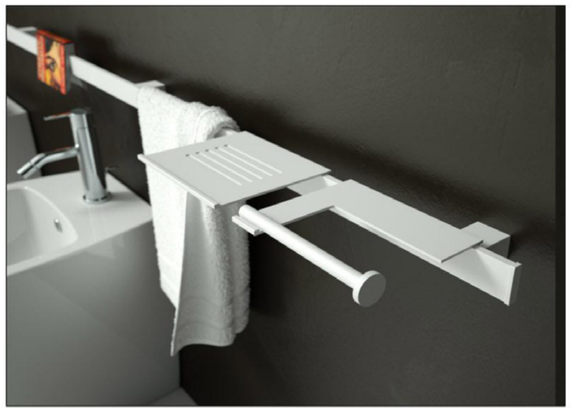

RIGA living

RIGA is spciality useful to compose equipped boiserie which design the hall and the living space. Arranging profiles to different height, it is possible to modulate different horizontal: wooden, glass, mirror panels or different material panels. Aluminum shelves available in different lengths, can be freely located at any moment in any position.

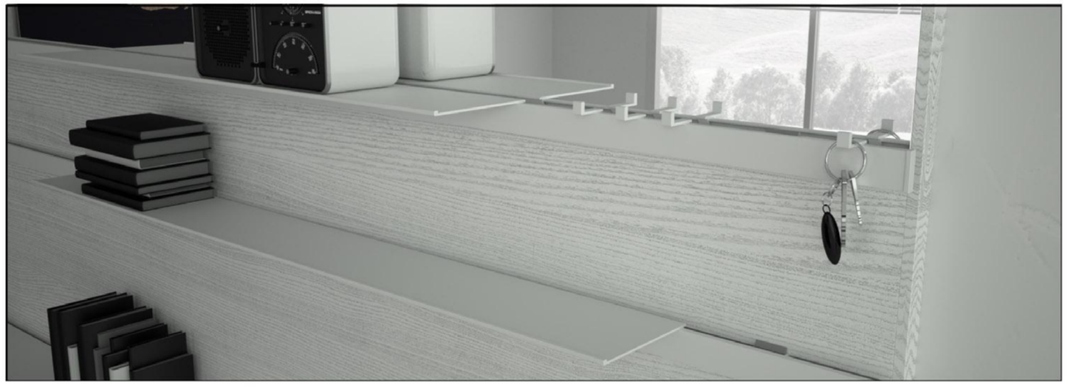

RIGA children bedroom

It is passible to equiped children's room walls with light libraries arranges in a manner to hold wooden shelves, cd shelves, pen and pncil holders, hooks etc.

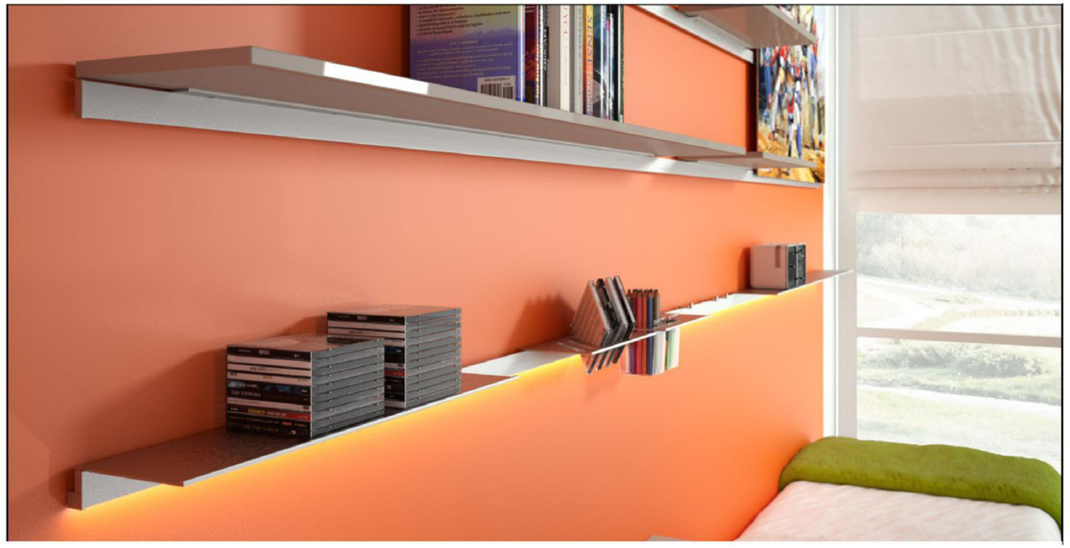

RIGA components

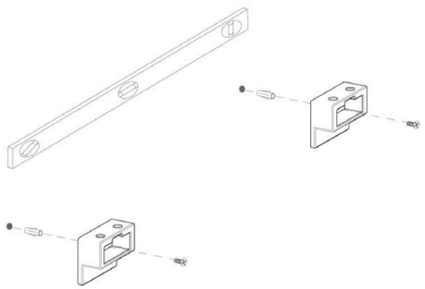

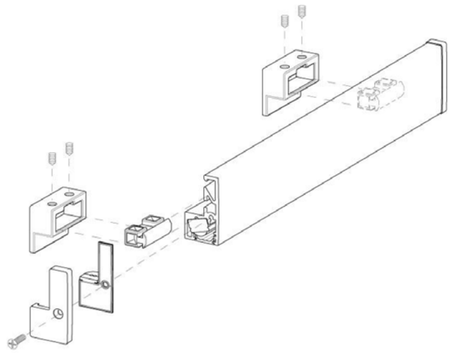

exploded view with wall support mm 12

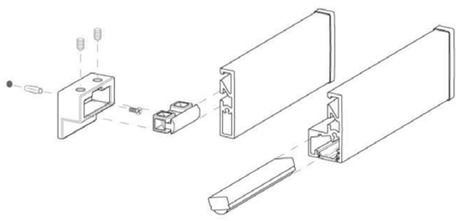

esploded view with wall support mm 40
for glass/mirror/wooden panel

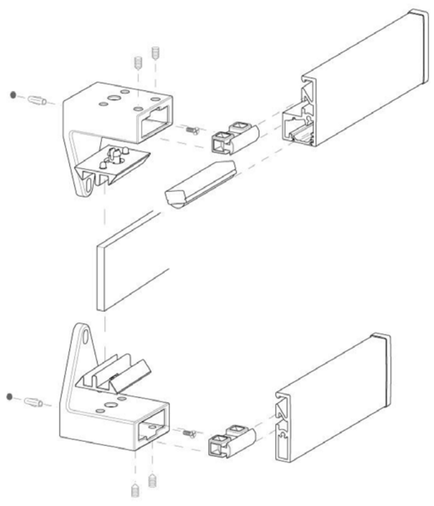

esploded view with wall support mm 40

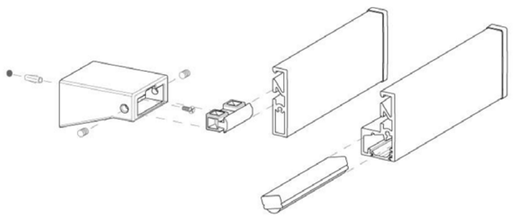

profile A - length mm 3000

A35698 3000...

minimum order 10 pcs

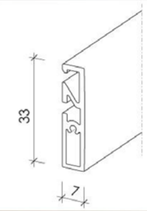

profile B - for led light
length mm 3000

A35703 3000...

minimum order 10 pcs

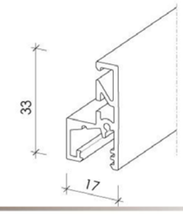

couple of and caps for profile A

A3502 0033...

minimum order 20 couple

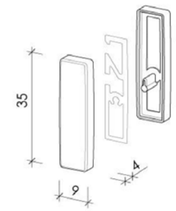

couple of and caps for light
profile B with gasket and
cable bushing

A3503 0033...

minimum order 20 couple

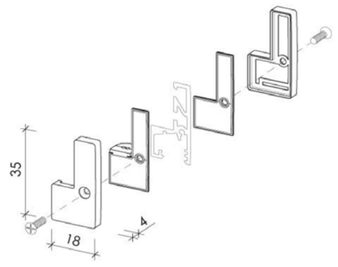

plastic covering for light profile B
length mm 3000 opaline colour

A3504 3000 000

minimum order 10 pcs

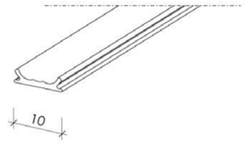

wall support mm 12

A3505 0012...

minimum order 20 pcs

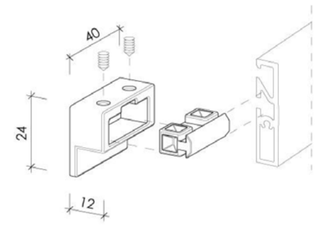

wall support mm 40

A3506 0040...

minimum order 20 pcs

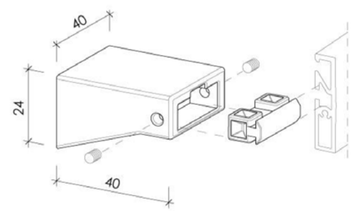

wall support mm 40
for glass/mirror/wooden panel

A3507 0040...

minimum order 20 pcs

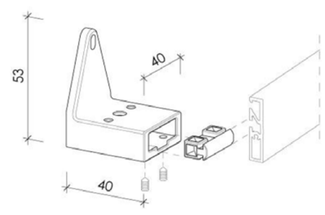

gasket fot glass/mirror mm 4/6
and for wooden panel mm 4 - 20

A3508 0030...

minimum order 20 pcs

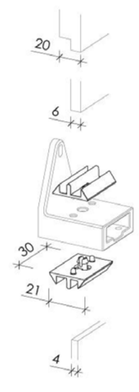

aluminium shelf

A3509 0300... L = 300 mm
A3509 0600... L = 600 mm
A3509 0900... L = 900 mm

minimum order 10 pcs

different measures on request

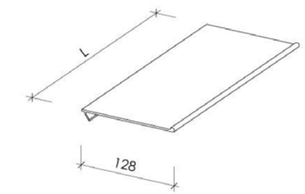

aluminium kitchen roll holder

A3510 0330...

minimum order 10 pcs

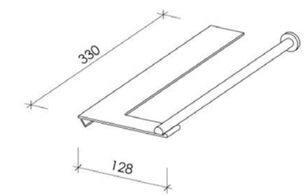

aluminium shelf with 2
transparent plastic jar

A3511 0300...

minimum order 10 pcs

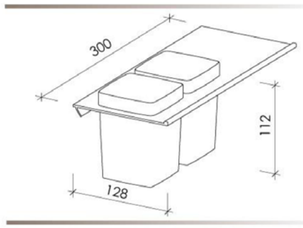

aluminium magnetic knives holder

A3512 0250...

minimum order 10 pcs

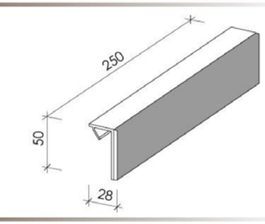

aluminium hook mm 10

A3513 0010...

minimum order 20 pcs

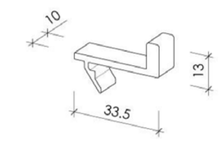

glass shelf holder mm 6
maximum deepness mm 180

A3514 0030...

minimum order 20 pcs

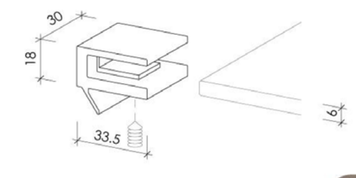

art

drawing

glass shelf holder mm 8
maximum deepness mm 180

A3515 0032...

minimum order 20 pcs

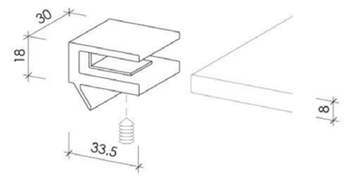

wooden shelf holder mm 500
maximum deepness mm 200

A3516 0500...

minimum order 10 pcs

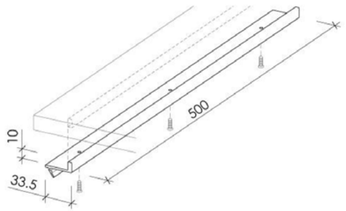

aluminium cd holder

A3517 0300...

minimum order 10 pcs

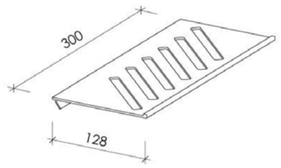

aluminium tooth-brush holder
with aluminium glass

A3518 0100...

minimum order 10 pcs

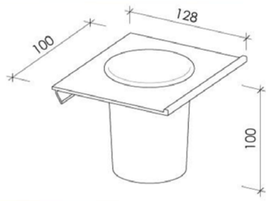

aluminium soap holder

A3519 0150...

minimum order 10 pcs

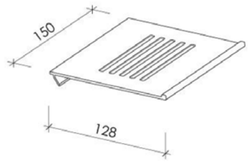

aluminium toilet paper holder

A3520 0150...

minimum order 10 pcs

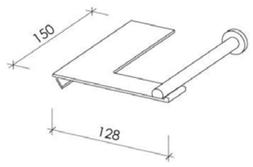

art

drawing

Kit A without light, with wall
supports mm 12

kit composed by:
profile, wall supports and caps.

Kit A3500B 0600 mm...

Kit A3500B 0900 mm...

Kit A3500B 1200 mm...

minimum order 10 kit

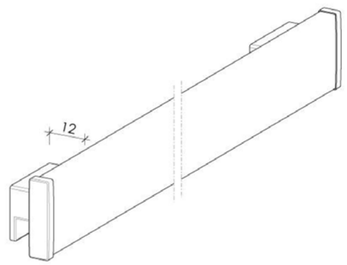

Kit B with light, with wall
supports mm 12

kit composed by: profile, wall support,
caps and led light.

Kit A3501B 0600 mm...

Kit A3501B 0900 mm...

Kit A3501B 1200 mm...

minimum order 10 kit
IP45 water certification

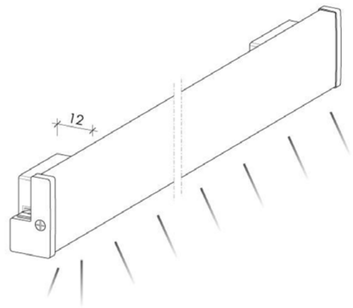

Kit B with light, wall supports
mm 12 and touch switch

kit composed by: profile, wall support,
caps, led light and touch switch.

Kit A3501 BI 0600 mm...

Kit A3501 BI 0900 mm...

Kit A3501 BI 1200 mm...

minimum order 10 kit
IP45 water certification

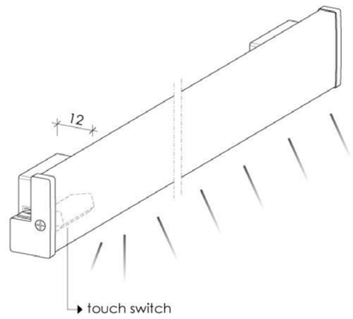

art

drawing

Kit A without light, with wall supports mm 40

kit composed by:
profile, wall supports and caps.

Kit 600 mm	A3500A 0600...
Kit 900 mm	A3500A 0900...
Kit 1200 mm	A3500A 1200...

minimum order 10 kit

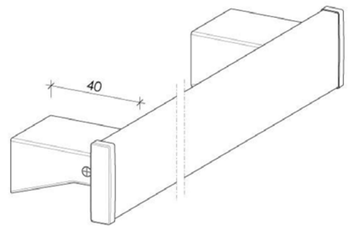

Kit B with light, with wall supports mm 40

kit composed by: profile, wall support, caps and led light.

Kit 600 mm	A3501A 0600...
Kit 900 mm	A3501A 0900...
Kit 1200 mm	A3501A 1200...

minimum order 10 kit
IP45 water certification

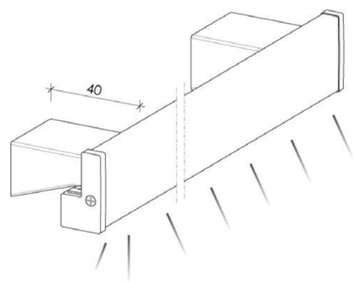

Kit B with light, wall supports mm 40 and touch switch

kit composed by: profile, wall support, caps, led light and touch switch.

Kit 600 mm	A3501 AI 0600...
Kit 900 mm	A3501 AI 0900...
Kit 1200 mm	A3501 AI 1200...

minimum order 10 kit
IP45 water certification

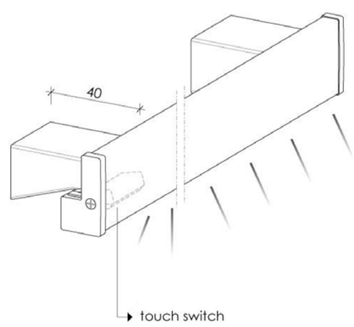

art

drawing

kit A without light, with wall supports mm 40 for glass/mirror/panel

kit composed by:
profile, wall supports and caps.

Kit 600 mm	A3500VP 0600 mm...
Kit 900 mm	A3500VP 0900 mm...
Kit 1200 mm	A3500VP 1200 mm...

ordine minimo 10 kit

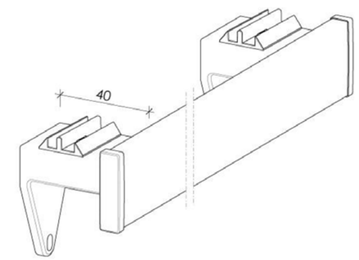

kit B with light, with wall supports mm 40 for glass/mirror/panel

kit composed by: profile, wall support, caps and led light.

Kit 600 mm	A3501VP 0600...
Kit 900 mm	A3501VP 0900...
Kit 1200 mm	A3501VP 1200...

minimum order 10 kit
IP45 water certification

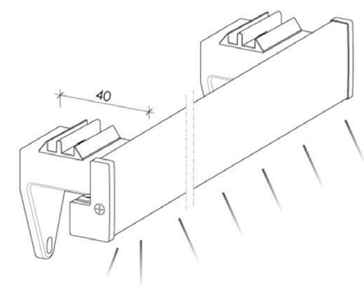

Kit B with light, wall supports mm 40 for glass/mirror/panel and touch switch

kit composed by: profile, wall support, caps, led light and touch switch.

Kit 600 mm	A3501VPI 0600...
Kit 900 mm	A3501 VPI 0900...
Kit 1200 mm	A3501 VPI 1200mm...

minimum order 10 kit
IP45 water certification

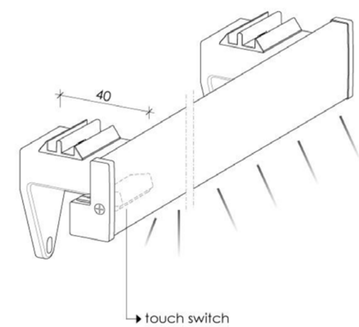

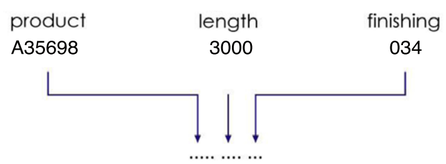

Catalog's finishing

Anodised aluminum 035
Steel 019
White painted 021
Aluminum painted 034

other finishing on request

RIGA

ALL FOR FURNITURE

- MODERN SOLUTIONS FOR YOUR HOME -

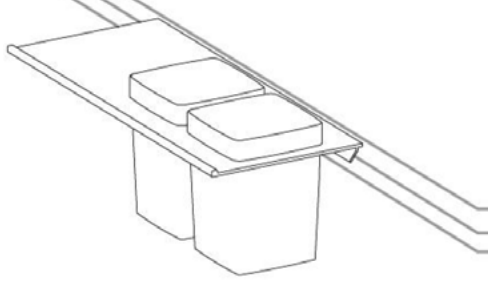

8654 P.O. BOX Tarrytwon, NY 10591-9998

Ph. 1-914-909-4571 Fax. 1-914-909-4572

INFO@ALLFORFURNITURE.COM WWW.ALLFORFURNITURE.COM